ICOM ① IC-718 SCHEMATIC DIAGRAM

Downloaded by
Amateur Radio Directory
www.hamdirectory.info

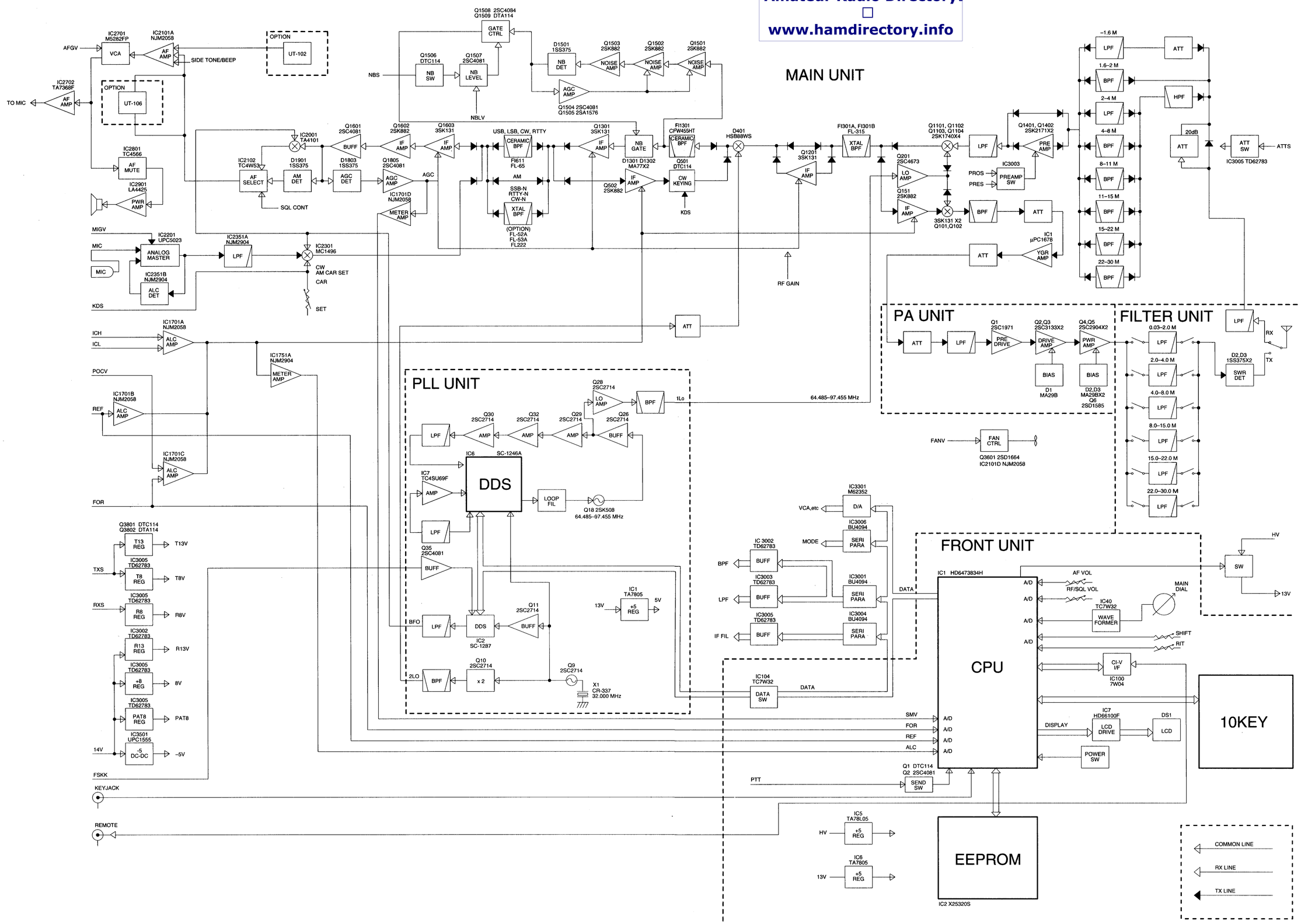

To upgrade quality, some components may be subject to change without notice.

A-5649MH-2G
Printed in Japan
© 2000 Icom Inc.

Icom Inc.

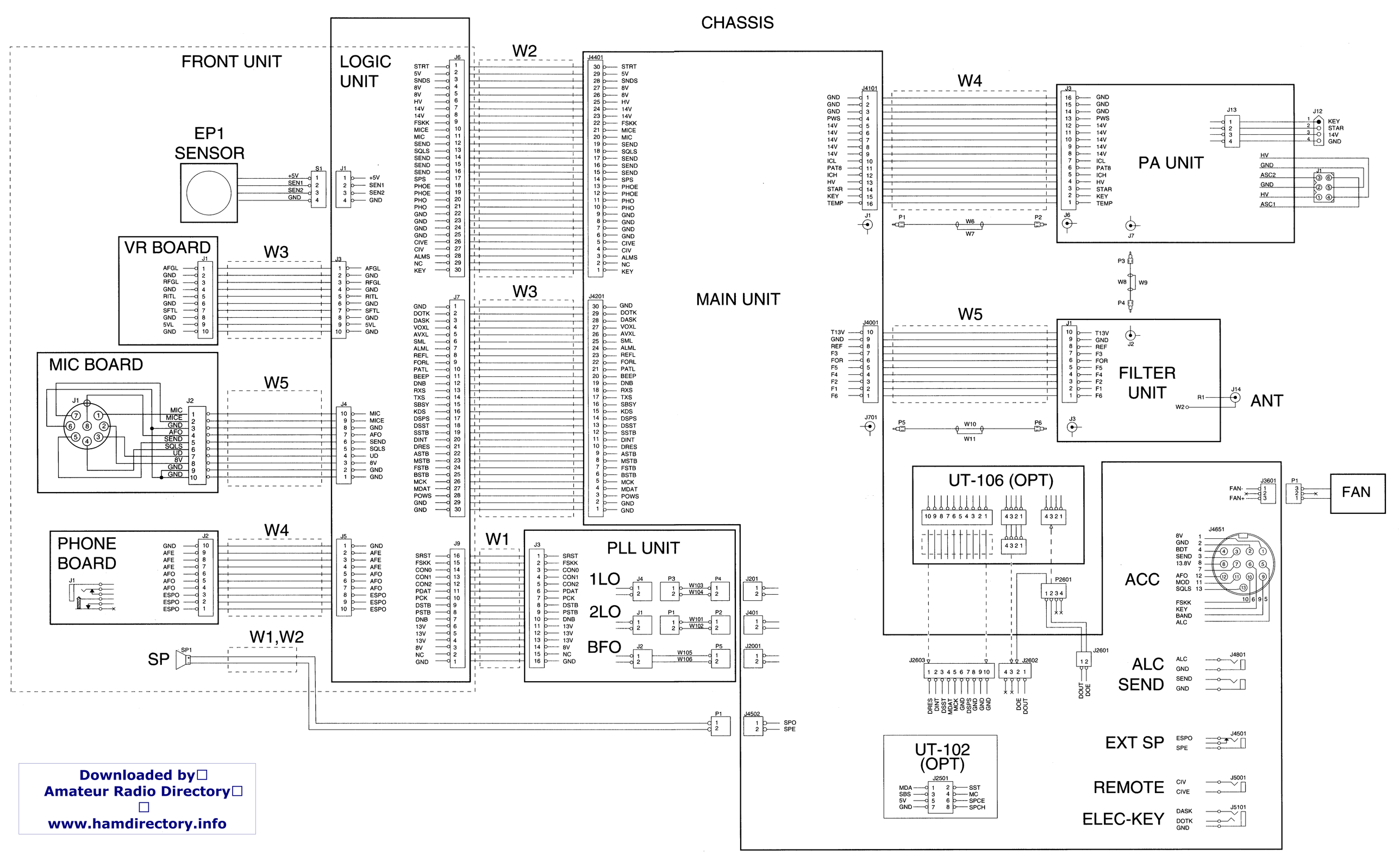

Downloaded by
Amateur Radio Directory
www.hamdirectory.info

Downloaded by
Amateur Radio Directory
www.hamdirectory.info

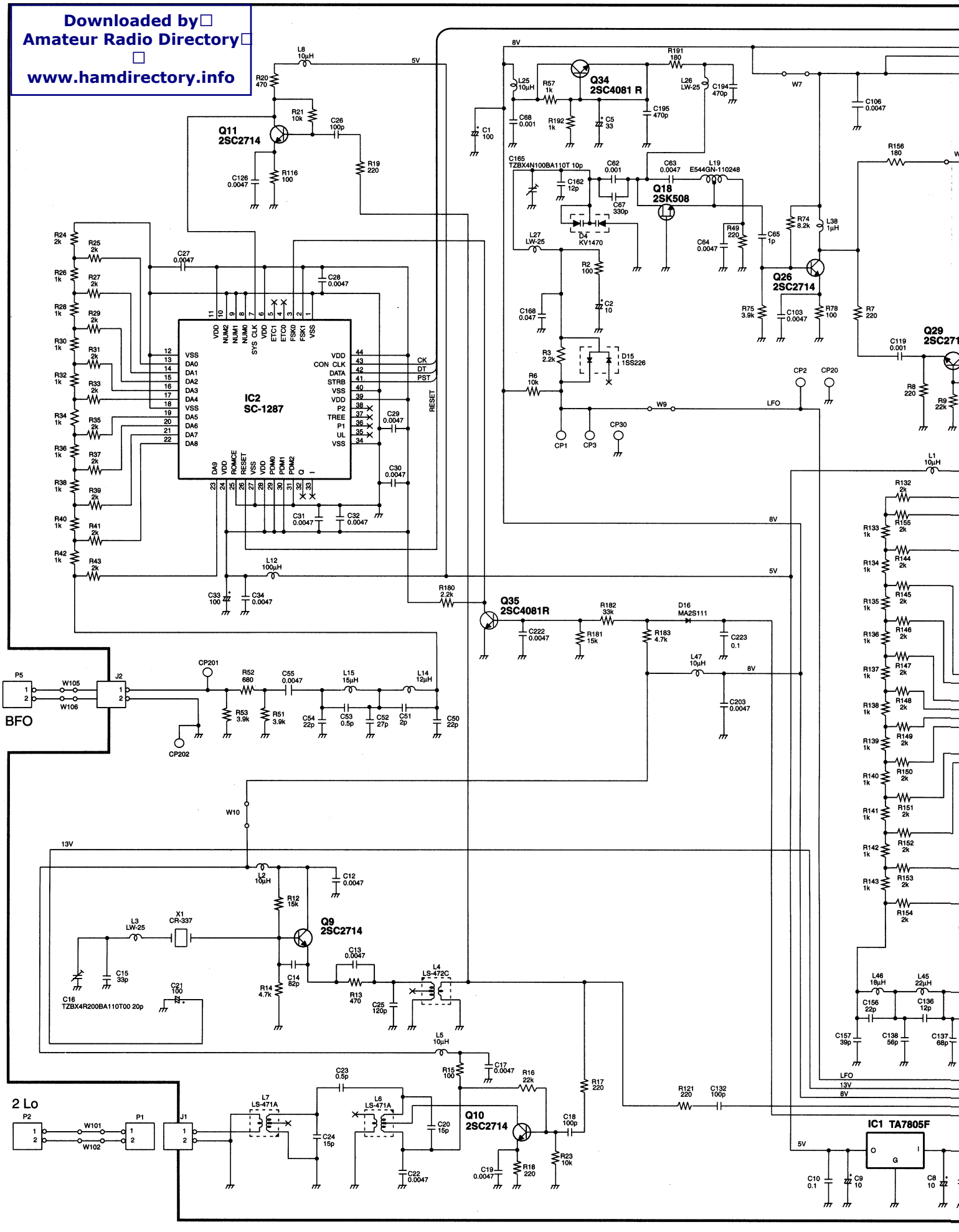

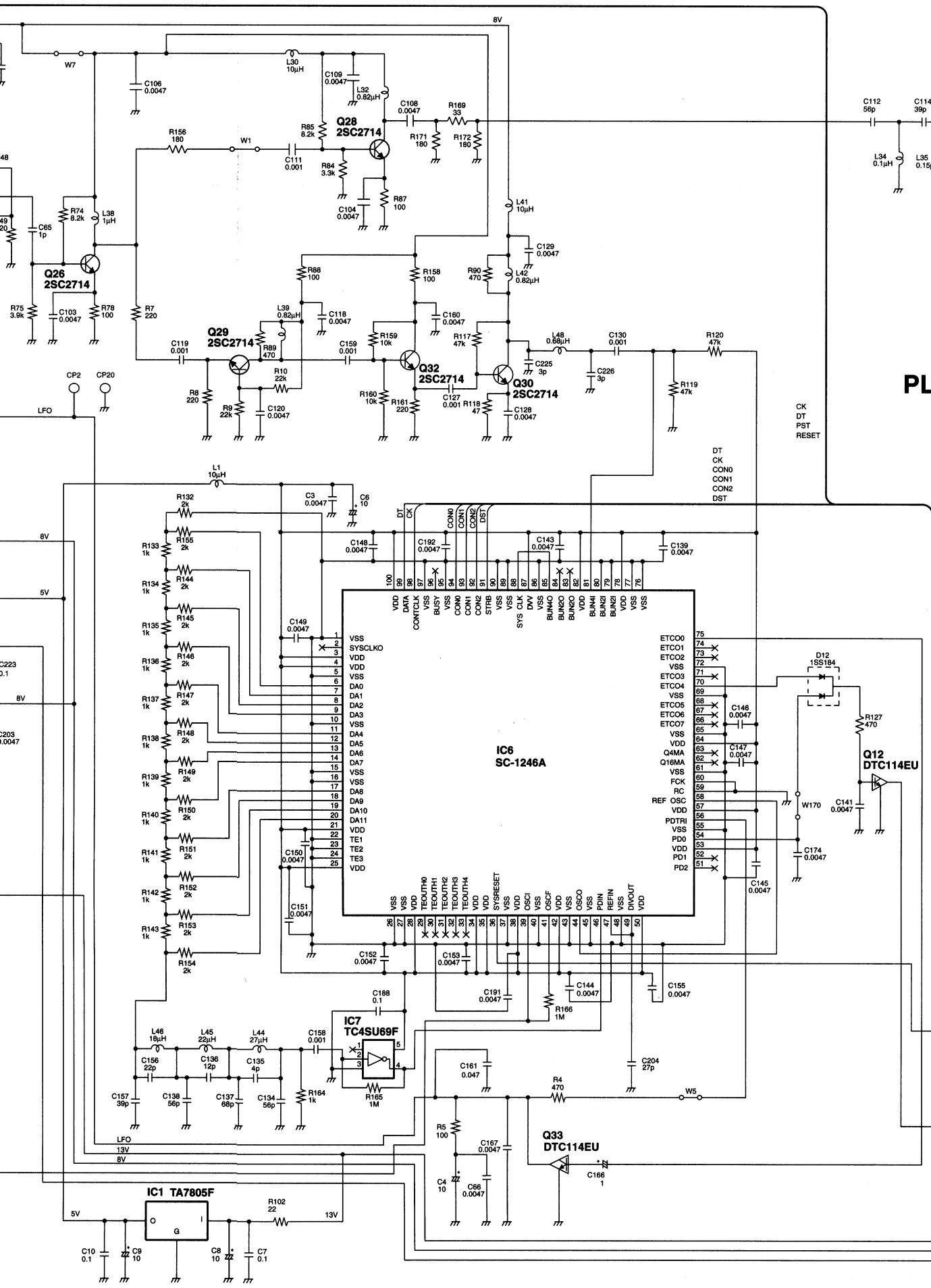
8V
W7
C106 0.0047
L30 10µH
C109 0.0047
L32 0.82µH
Q28 2SC2714
C108 0.0047
R169 33
R171 180
R172 180
R156 180
W1
C111 0.001
R85 8.2k
R84 3.3k
C104 0.0047
R87 100
C112 56p
L34 0.1µH
L38 1µH
R74 8.2k
C65 1p
Q26 2SC2714
R75 3.9k
C103 0.0047
R78 100
R7 220
L41 10µH
C129 0.0047
R88 100
R158 100
R90 470
L42 0.82µH
L39 0.82µH
C118 0.0047
C160 0.0047
Q29 2SC2714
R89 470
R159 10k
R117 47k
L48 0.68µH
C130 0.001
R120 47k
C119 0.001
C159 0.001
R10 22k
Q32 2SC2714
C225 3p
C226 3p
R119 47k
CP2
CP20
R8 220
R9 22k
C120 0.0047
R160 10k
R161 220
C127 0.001
R118 47
C128 0.0047
Q30 2SC2714
LFO
CK
DT
PST
RESET
DT
CK
CON0
CON1
CON2
DST
L1 10µH
C3 0.0047
C6 10
R132 2k
R133 1k
R155 2k
R134 1k
R144 2k
R145 2k
R135 1k
R146 2k
R136 1k
R147 2k
R137 1k
R148 2k
R138 1k
R149 2k
R139 1k
R150 2k
R140 1k
R151 2k
R141 1k
R152 2k
R142 1k
R153 2k
R143 1k
R154 2k
C148 0.0047
C192 0.0047
C143 0.0047
C139 0.0047
C149 0.0047
C150 0.0047
C151 0.0047
C152 0.0047
C153 0.0047
C191 0.0047
C144 0.0047
C155 0.0047
C145 0.0047
C174 0.0047
C146 0.0047
C147 0.0047
IC6 SC-1246A
VDD DATA CONTCLK VSS BUSY VSS CON0 CON1 CON2 STRB VSS VSS SYS CLK DVV VSS BUN4O BUN2O BUN2O VDD BUN4I BUN2I BUN2I VDD VDD VSS VSS
VSS SYSCLKO VDD VDD VSS DA0 DA1 DA2 DA3 VSS DA4 DA5 DA6 DA7 VSS VSS DA8 DA9 DA10 DA11 VDD TE1 TE2 TE3 VDD
ETCO0 ETCO1 ETCO2 VSS ETCO3 ETCO4 VSS ETCO5 ETCO6 ETCO7 VSS VDD Q4MA Q16MA VSS FCK RC REF OSC VDD PDTRI VSS PD0 VDD PD1 PD2
VSS VSS VDD TEOUTH0 TEOUTH1 TEOUTH2 TEOUTH3 TEOUTH4 VDD VDD SYSRESET VSS VDD OSCI VSS OSCF VDD VSS OSCO VSS PDIN REFIN VSS DIVOUT VDD
D12 1SS184
R127 470
Q12 DTC114EU
W170
C141 0.0047
C188 0.1
IC7 TC4SU69F
R166 1M
L46 18µH
L45 22µH
L44 27µH
C158 0.001
C156 22p
C136 12p
C135 4p
C157 39p
C138 56p
C137 68p
C134 56p
R164 1k
R165 1M
C161 0.047
C204 27p
R4 470
W5
R5 100
C167 0.0047
Q33 DTC114EU
C166 1
C4 10
C66 0.0047
LFO
13V
8V
IC1 TA7805F
5V
R102 22
13V
C10 0.1
C9 10
C8 10
C7 0.1

Downloaded by
Amateur Radio Directory
www.hamdirectory.info

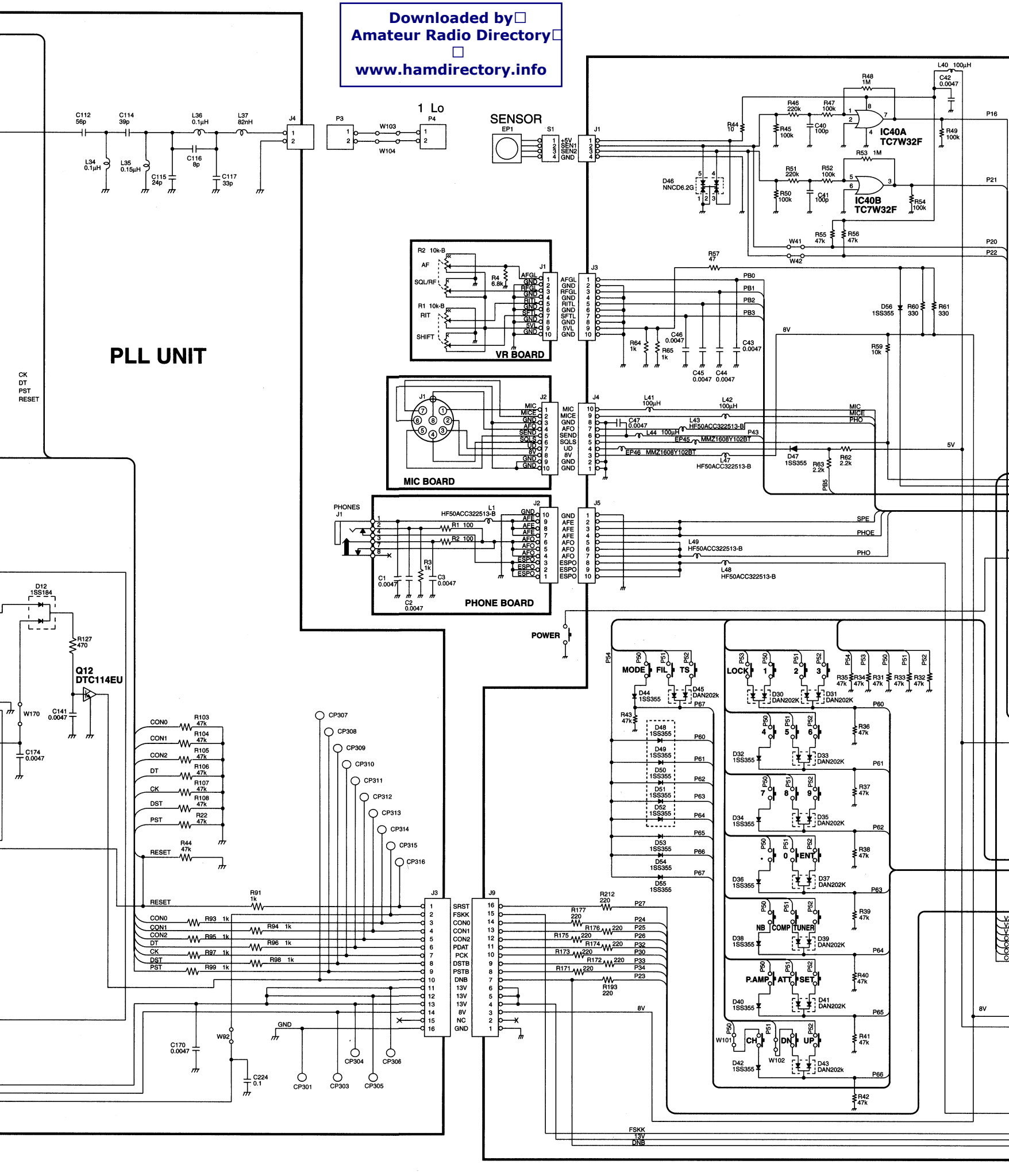

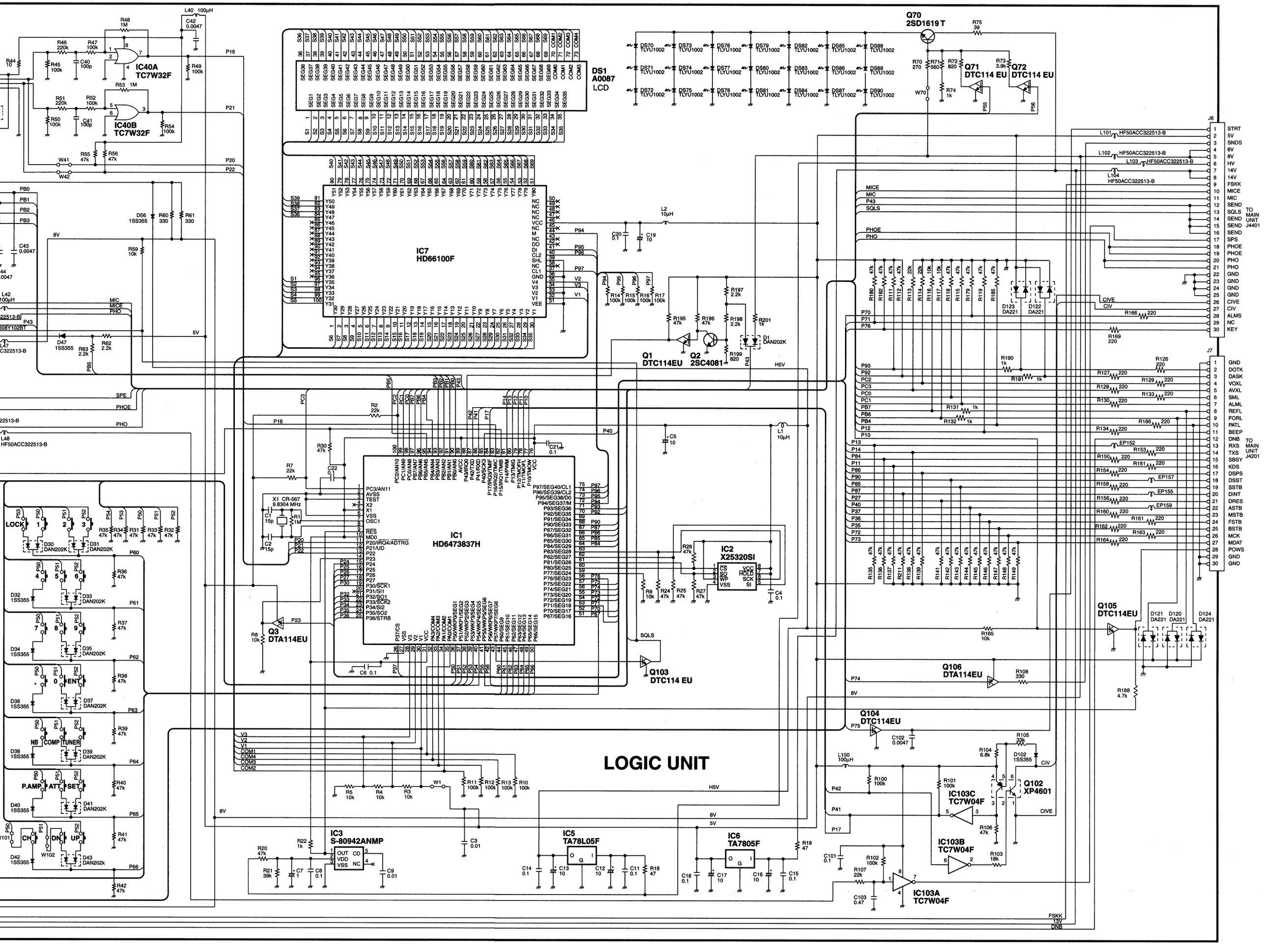
LOGIC UNIT
IC1
HD6473837H
IC7
HD66100F
DS1
A0087
LCD
IC40A
TC7W32F
IC40B
TC7W32F
IC2
X25320SI
IC3
S-80942ANMP
IC5
TA78L05F
IC6
TA7805F
IC103A
TC7W04F
IC103B
TC7W04F
IC103C
TC7W04F
Q70
2SD1619T
Q71
DTC114 EU
Q72
DTC114 EU
Q1
DTC114EU
Q2
2SC4081
Q3
DTA114EU
Q103
DTC114 EU
Q104
DTC114EU
Q105
DTC114EU
Q106
DTA114EU
Q102
XP4601
J6
J7
TO MAIN UNIT J4401
TO MAIN UNIT J4201
STRT
5V
SNDS
8V
HV
14V
FSKK
MICE
MIC
SEND
SQLS
SPS
PHOE
PHO
GND
CIVE
CIV
ALMS
NC
KEY
DOTK
DASK
VOXL
AVXL
SML
ALML
REFL
FORL
PATL
BEEP
DNB
RXS
TXS
SBSY
KDS
DSPS
DSST
SSTB
DINT
DRES
ASTB
MSTB
FSTB
BSTB
MCK
MDAT
POWS
LOCK
NB
COMP
TUNER
P.AMP
ATT
SET
CH
DN
UP
ENT
X1 CR-567
9.8304 MHz
H5V
13V

ICOM ② IC-718 SCHEMATIC DIAGRAM

Downloaded by
Amateur Radio Directory
www.hamdirectory.info

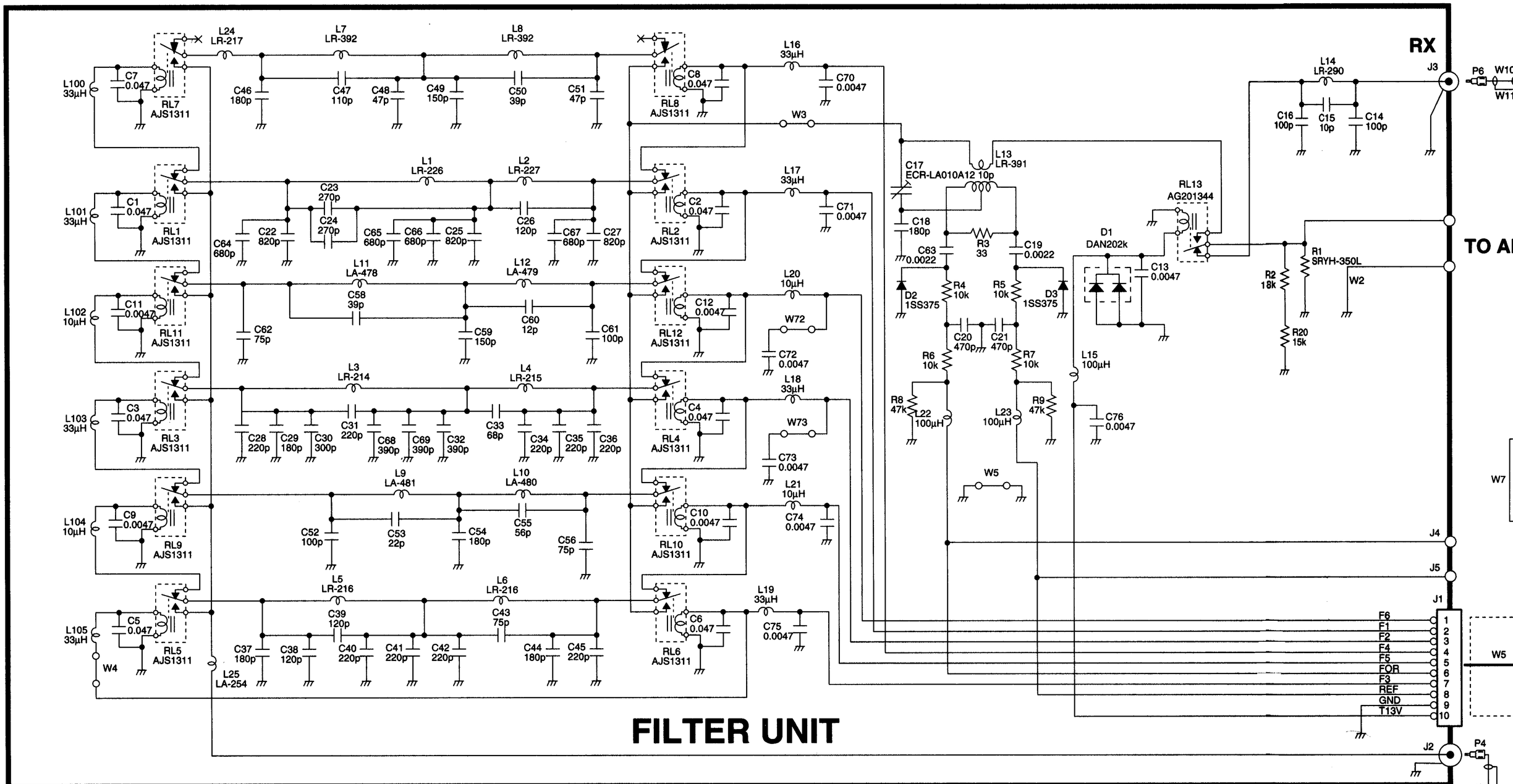

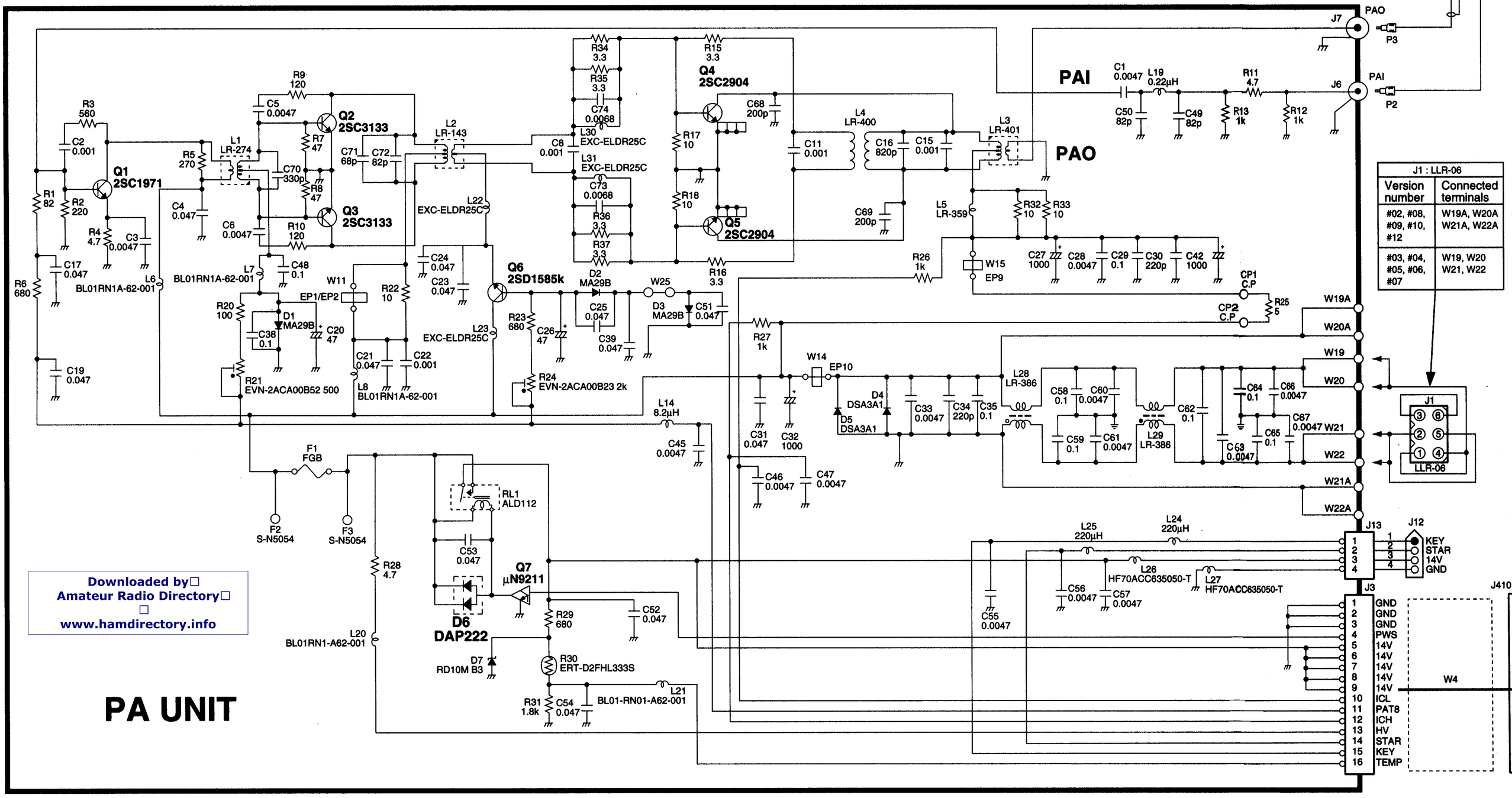
PA UNIT
PAO
PAI
J7
J6
P3
P2
Q1 2SC1971
Q2 2SC3133
Q3 2SC3133
Q4 2SC2904
Q5 2SC2904
Q6 2SD1585k
Q7 μN9211
D6 DAP222
RL1 ALD112
F1 FGB
F2 S-N5054
F3 S-N5054
J1 : LLR-06
Version number
Connected terminals
#02, #08, #09, #10, #12
W19A, W20A W21A, W22A
#03, #04, #05, #06, #07
W19, W20 W21, W22
J1
LLR-06
J12
KEY
STAR
14V
GND
J13
J3
GND
GND
GND
PWS
14V
14V
14V
14V
14V
ICL
PAT8
ICH
HV
STAR
KEY
TEMP
J410
W4
W19A
W20A
W19
W20
W21
W22
W21A
W22A
CP1 C.P
CP2 C.P
W15 EP9
W14 EP10
W11 EP1/EP2
W25
L4 LR-400
L3 LR-401
L5 LR-359
L28 LR-386
L29 LR-386
L2 LR-143
L1 LR-274
L30 EXC-ELDR25C
L31 EXC-ELDR25C
L22 EXC-ELDR25C
L23 EXC-ELDR25C
L7 BL01RN1A-62-001
L6 BL01RN1A-62-001
L8 BL01RN1A-62-001
L20 BL01RN1-A62-001
L21 BL01-RN01-A62-001
L24 220μH
L25 220μH
L26 HF70ACC635050-T
L27 HF70ACC635050-T
L14 8.2μH
D1 MA29B
D2 MA29B
D3 MA29B
D4 DSA3A1
D5 DSA3A1
D7 RD10M B3
R21 EVN-2ACA00B52 500
R24 EVN-2ACA00B23 2k
R30 ERT-D2FHL333S
Downloaded by
Amateur Radio Directory
www.hamdirectory.info

Downloaded by
Amateur Radio Directory
www.hamdirectory.info

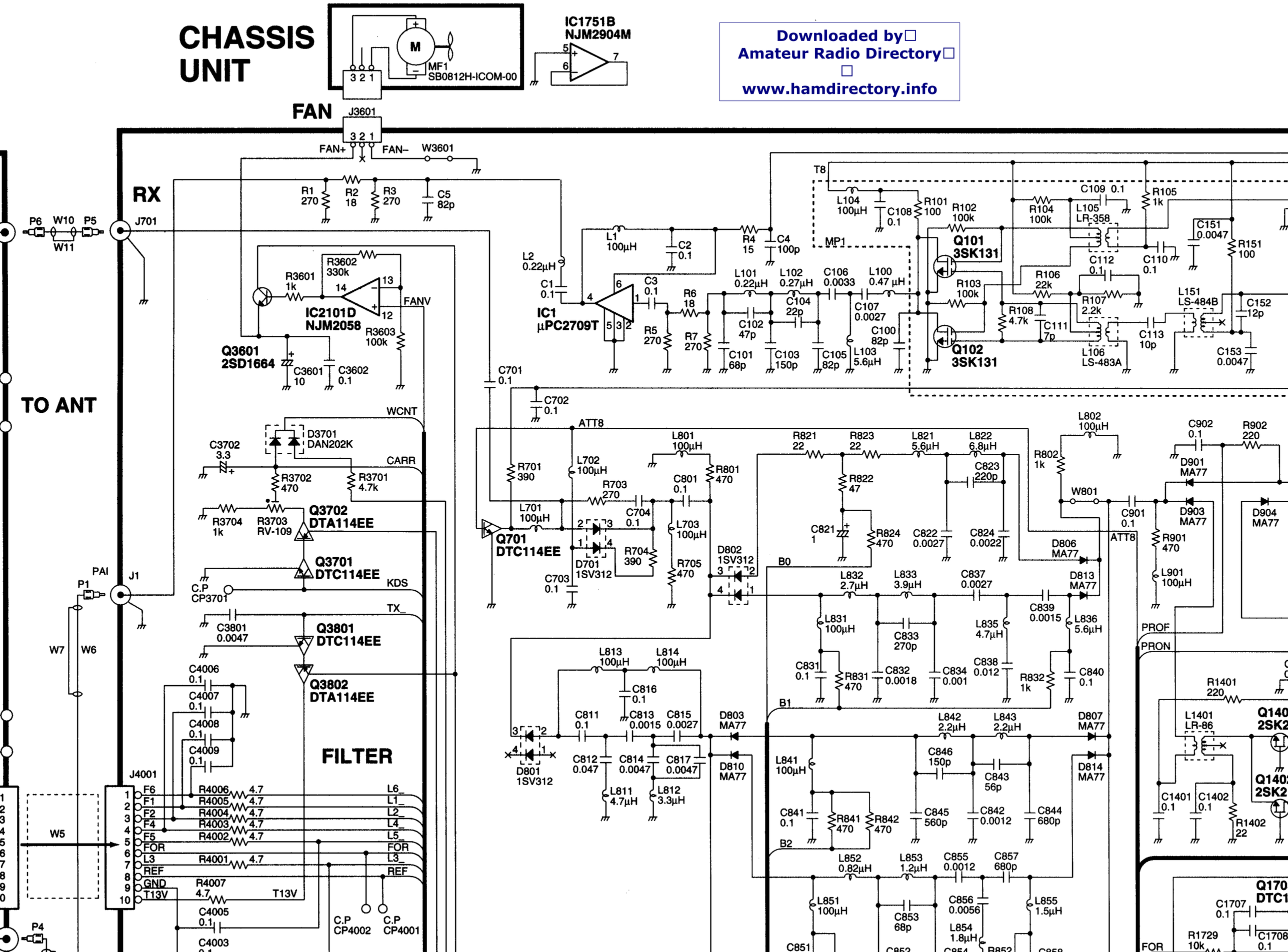

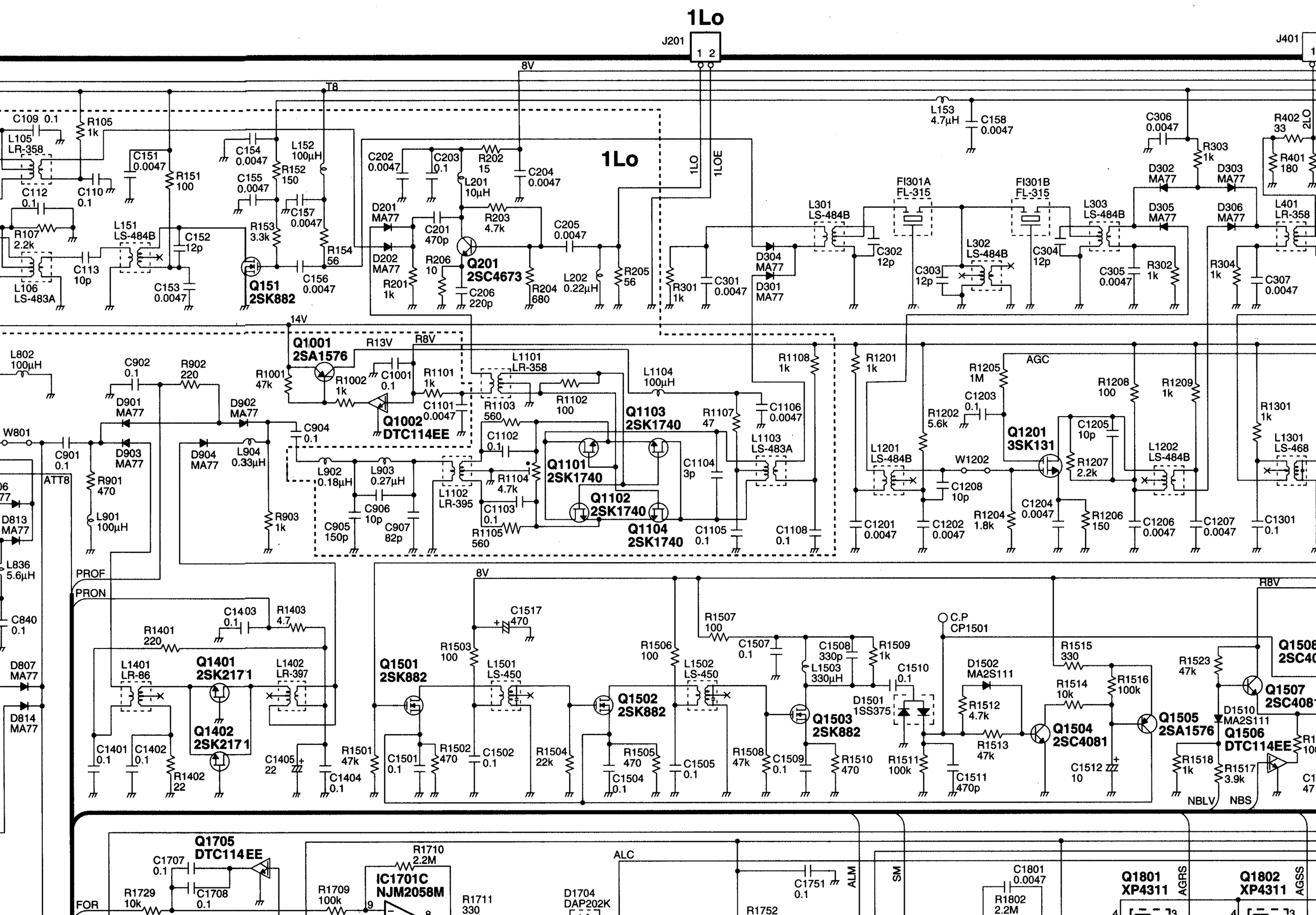
1Lo
J201
1 2
J401
8V
T8
C109 0.1
R105 1k
L105 LR-358
C151 0.0047
R151 100
C112 0.1
C110 0.1
R107 2.2k
L151 LS-484B
C152 12p
C113 10p
L106 LS-483A
C153 0.0047
C154 0.0047
L152 100μH
R152 150
C155 0.0047
C157 0.0047
R153 3.3k
R154 56
Q151 2SK882
C156 0.0047
C202 0.0047
C203 0.1
R202 15
C204 0.0047
L201 10μH
D201 MA77
R203 4.7k
C201 470p
C205 0.0047
D202 MA77
R206 10
Q201 2SC4673
R201 1k
C206 220p
R204 680
L202 0.22μH
R205 56
1LO
1LOE
L153 4.7μH
C158 0.0047
C306 0.0047
R303 1k
R402 33
2LO
R401 180
D302 MA77
D303 MA77
FI301A FL-315
FI301B FL-315
L301 LS-484B
L303 LS-484B
D305 MA77
D306 MA77
L401 LR-358
C302 12p
L302 LS-484B
C304 12p
D304 MA77
R301 1k
C301 0.0047
D301 MA77
C303 12p
C305 0.0047
R302 1k
R304 1k
C307 0.0047
14V
L802 100μH
C902 0.1
R902 220
Q1001 2SA1576
R13V
R8V
R1001 47k
R1002 1k
C1001 0.1
R1101 1k
Q1002 DTC114EE
C1101 0.0047
L1101 LR-358
R1103 560
R1102 100
L1104 100μH
R1108 1k
R1201 1k
AGC
R1205 1M
C1203 0.1
R1208 100
R1209 1k
R1301 1k
W801
C901 0.1
D901 MA77
D902 MA77
C904 0.1
Q1103 2SK1740
R1107 47
C1106 0.0047
R1202 5.6k
Q1201 3SK131
C1205 10p
L1103 LS-483A
D903 MA77
D904 MA77
L904 0.33μH
C1102 0.1
Q1101 2SK1740
L1201 LS-484B
L1202 LS-484B
L1301 LS-468
ATT8
R901 470
L902 0.18μH
L903 0.27μH
R1104 4.7k
C1104 3p
W1202
R1207 2.2k
L901 100μH
R903 1k
C906 10p
L1102 LR-395
C1103 0.1
Q1102 2SK1740
C1208 10p
C1204 0.0047
D813 MA77
C905 150p
C907 82p
R1105 560
Q1104 2SK1740
C1105 0.1
C1108 0.1
C1201 0.0047
C1202 0.0047
R1204 1.8k
R1206 150
C1206 0.0047
C1207 0.0047
C1301 0.1
L836 5.6μH
PROF
PRON
8V
R8V
C1403 0.1
R1403 4.7
C1517 470
R1507 100
C.P CP1501
R1515 330
R1523 47k
Q1508 2SC40
C840 0.1
R1401 220
R1503 100
R1506 100
C1507 0.1
C1508 330p
R1509 1k
L1503 330μH
C1510 0.1
D1502 MA2S111
R1516 100k
Q1507 2SC408
D807 MA77
L1401 LR-86
Q1401 2SK2171
L1402 LR-397
Q1501 2SK882
L1501 LS-450
L1502 LS-450
Q1502 2SK882
Q1503 2SK882
D1501 1SS375
R1514 10k
R1512 4.7k
Q1504 2SC4081
Q1505 2SA1576
D1510 MA2S111
Q1506 DTC114EE
D814 MA77
Q1402 2SK2171
C1401 0.1
C1402 0.1
R1402 22
C1405 22
C1404 0.1
R1501 47k
C1501 0.1
R1502 470
C1502 0.1
R1504 22k
R1505 470
C1504 0.1
C1505 0.1
R1508 47k
C1509 0.1
R1510 470
R1511 100k
R1513 47k
C1511 470p
C1512 10
R1518 1k
R1517 3.9k
NBLV
NBS
Q1705 DTC114EE
C1707 0.1
C1708 0.1
R1710 2.2M
IC1701C NJM2058M
R1729 10k
R1709 100k
R1711 330
D1704 DAP202K
ALC
C1751 0.1
ALM
SM
C1801 0.0047
R1802 2.2M
Q1801 XP4311
AGRS
Q1802 XP4311
AGSS
FOR

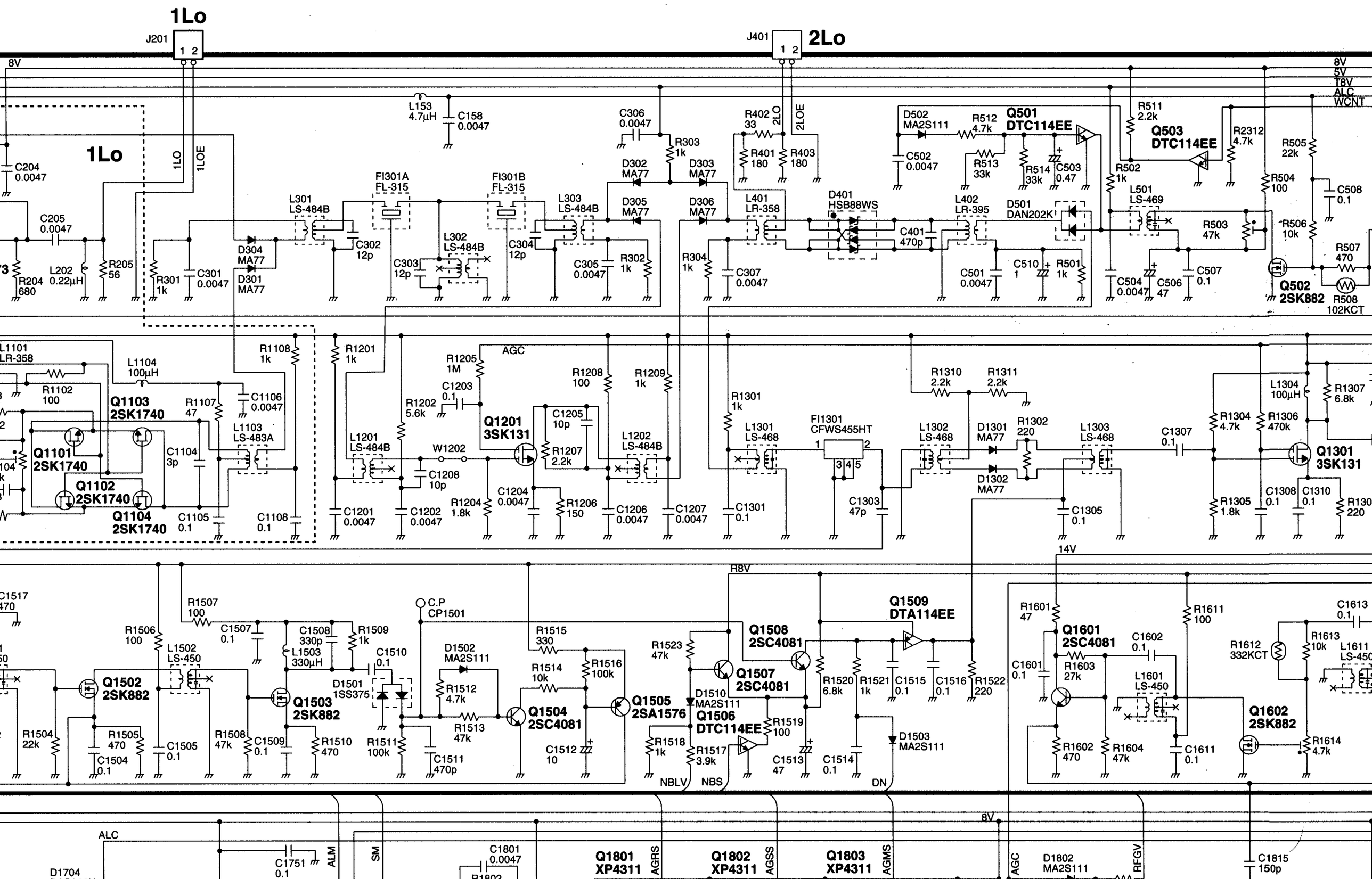
1Lo
J201
1 2
2Lo
J401
1 2
8V
5V
T8V
ALC
WCNT
1LO
1LOE
2LO
2LOE
L153
4.7μH
C158
0.0047
C204
0.0047
C205
0.0047
R204
680
L202
0.22μH
R205
56
R301
1k
C301
0.0047
D304
MA77
D301
MA77
L301
LS-484B
C302
12p
FI301A
FL-315
FI301B
FL-315
C303
12p
L302
LS-484B
C304
12p
L303
LS-484B
C305
0.0047
R302
1k
C306
0.0047
R303
1k
D302
MA77
D303
MA77
D305
MA77
D306
MA77
R304
1k
C307
0.0047
R402
33
R401
180
R403
180
L401
LR-358
D401
HSB88WS
C401
470p
L402
LR-395
D501
DAN202K
D502
MA2S111
R512
4.7k
Q501
DTC114EE
C502
0.0047
R513
33k
R514
33k
C503
0.47
R511
2.2k
Q503
DTC114EE
R502
1k
L501
LS-469
R503
47k
C501
0.0047
C510
1
R501
1k
C504
0.0047
C506
47
C507
0.1
R2312
4.7k
R505
22k
R504
100
C508
0.1
R506
10k
R507
470
Q502
2SK882
R508
102KCT
L1101
LR-358
L1104
100μH
R1102
100
Q1103
2SK1740
R1107
47
C1106
0.0047
L1103
LS-483A
Q1101
2SK1740
C1104
3p
Q1102
2SK1740
Q1104
2SK1740
C1105
0.1
C1108
0.1
R1108
1k
R1201
1k
R1205
1M
AGC
C1203
0.1
R1202
5.6k
Q1201
3SK131
L1201
LS-484B
W1202
C1208
10p
C1201
0.0047
C1202
0.0047
R1204
1.8k
C1204
0.0047
C1205
10p
R1207
2.2k
R1206
150
R1208
100
R1209
1k
L1202
LS-484B
C1206
0.0047
C1207
0.0047
R1301
1k
L1301
LS-468
C1301
0.1
FI1301
CFWS455HT
C1303
47p
R1310
2.2k
R1311
2.2k
L1302
LS-468
D1301
MA77
D1302
MA77
R1302
220
L1303
LS-468
C1305
0.1
C1307
0.1
R1304
4.7k
R1305
1.8k
L1304
100μH
R1306
470k
R1307
6.8k
Q1301
3SK131
C1308
0.1
C1310
0.1
R1309
220
14V
R8V
C1517
470
R1507
100
R1506
100
C1507
0.1
L1502
LS-450
Q1502
2SK882
R1504
22k
R1505
470
C1504
0.1
C1505
0.1
C1508
330p
L1503
330μH
R1509
1k
Q1503
2SK882
R1508
47k
C1509
0.1
R1510
470
C1510
0.1
D1501
1SS375
R1511
100k
C1511
470p
C.P
CP1501
D1502
MA2S111
R1512
4.7k
R1513
47k
R1515
330
R1514
10k
R1516
100k
Q1504
2SC4081
C1512
10
Q1505
2SA1576
R1523
47k
Q1507
2SC4081
Q1508
2SC4081
Q1509
DTA114EE
D1510
MA2S111
Q1506
DTC114EE
R1518
1k
R1517
3.9k
R1519
100
C1513
47
C1514
0.1
R1520
6.8k
R1521
1k
C1515
0.1
C1516
0.1
R1522
220
D1503
MA2S111
NBLV
NBS
DN
R1601
47
Q1601
2SC4081
R1603
27k
C1601
0.1
C1602
0.1
L1601
LS-450
R1611
100
R1612
332KCT
R1613
10k
C1613
0.1
L1611
LS-450
Q1602
2SK882
R1614
4.7k
R1602
470
R1604
47k
C1611
0.1
ALC
D1704
DAP202K
C1751
0.1
ALM
SM
R1752
C1801
0.0047
R1802
2.2M
Q1801
XP4311
AGRS
Q1802
XP4311
AGSS
Q1803
XP4311
AGMS
AGC
D1802
MA2S111
RFGV
R1809
R1812
R1813
C1815
150p

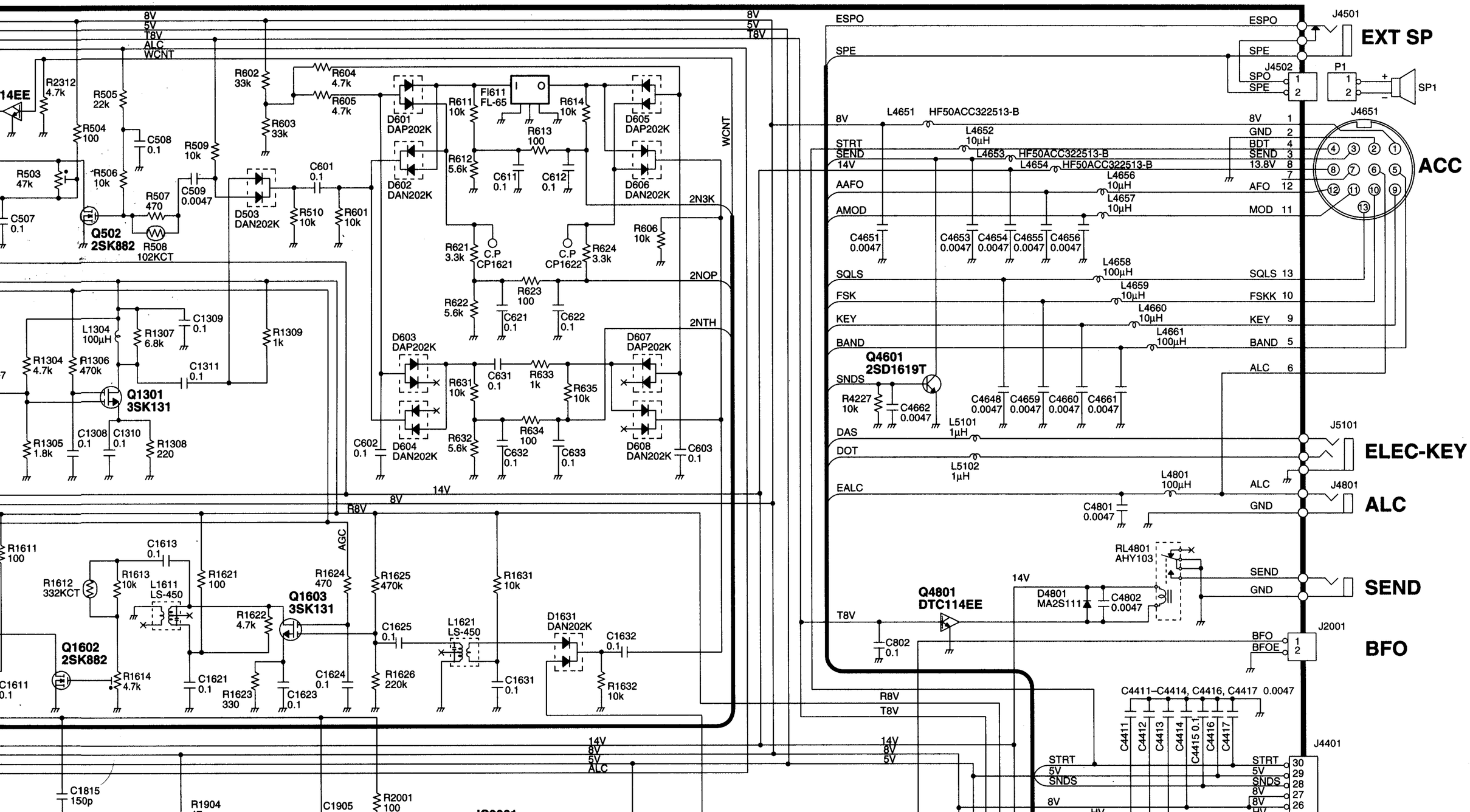
8V
5V
T8V
ALC
WCNT
14EE
R2312 4.7k
R505 22k
R504 100
C508 0.1
R509 10k
R503 47k
R506 10k
C507 0.1
Q502 2SK882
R507 470
R508 102KCT
C509 0.0047
R602 33k
R603 33k
R604 4.7k
R605 4.7k
D601 DAP202K
D602 DAN202K
D503 DAN202K
C601 0.1
R510 10k
R601 10k
FI611 FL-65
R611 10k
R612 5.6k
R613 100
R614 10k
C611 0.1
C612 0.1
D605 DAP202K
D606 DAN202K
2N3K
R606 10k
R621 3.3k
C.P CP1621
C.P CP1622
R624 3.3k
2NOP
R623 100
R622 5.6k
C621 0.1
C622 0.1
2NTH
D603 DAP202K
D607 DAP202K
R631 10k
C631 0.1
R633 1k
R635 10k
R634 100
R632 5.6k
C632 0.1
C633 0.1
C602 0.1
D604 DAN202K
D608 DAN202K
C603 0.1
L1304 100µH
R1307 6.8k
C1309 0.1
R1309 1k
R1304 4.7k
R1306 470k
C1311 0.1
Q1301 3SK131
R1305 1.8k
C1308 0.1
C1310 0.1
R1308 220
14V
8V
R8V
AGC
R1611 100
C1613 0.1
R1612 332KCT
R1613 10k
L1611 LS-450
R1621 100
R1624 470
R1625 470k
R1631 10k
Q1603 3SK131
R1622 4.7k
C1625 0.1
L1621 LS-450
D1631 DAN202K
C1632 0.1
Q1602 2SK882
C1611 0.1
R1614 4.7k
C1621 0.1
R1623 330
C1623 0.1
C1624 0.1
R1626 220k
C1631 0.1
R1632 10k
C1815 150p
R1904
C1905
R2001 100
ESPO
SPE
J4501
EXT SP
J4502
SPO
SPE
P1
SP1
8V
L4651 HF50ACC322513-B
L4652 10µH
STRT
SEND
L4653 HF50ACC322513-B
14V
L4654 HF50ACC322513-B
AAFO
L4656 10µH
AMOD
L4657 10µH
J4651
ACC
GND
BDT
13.8V
AFO
MOD
C4651 0.0047
C4653 0.0047
C4654 0.0047
C4655 0.0047
C4656 0.0047
SQLS
L4658 100µH
FSK
L4659 10µH
KEY
L4660 10µH
BAND
L4661 100µH
Q4601 2SD1619T
SNDS
R4227 10k
C4662 0.0047
C4648 0.0047
C4659 0.0047
C4660 0.0047
C4661 0.0047
DAS
L5101 1µH
DOT
L5102 1µH
J5101
ELEC-KEY
EALC
L4801 100µH
J4801
ALC
C4801 0.0047
RL4801 AHY103
D4801 MA2S111
C4802 0.0047
Q4801 DTC114EE
T8V
C802 0.1
J2001
BFO
BFOE
C4411–C4414, C4416, C4417 0.0047
C4411
C4412
C4413
C4414
C4415 0.1
C4416
C4417
J4401
STRT
5V
SNDS
8V
ALC

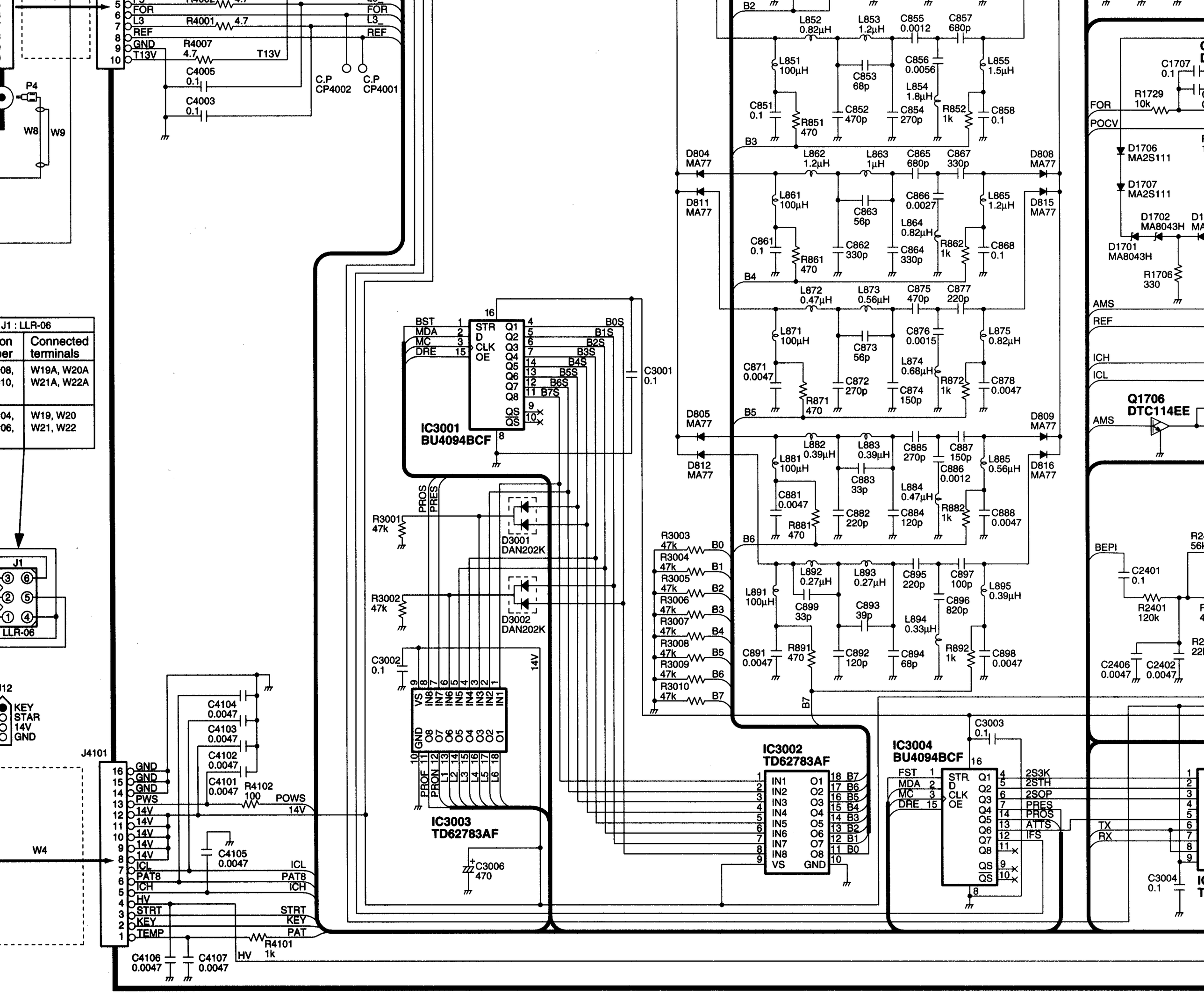
J1 : LLR-06
on
ber
Connected terminals
08, 10,
W19A, W20A W21A, W22A
04, 06,
W19, W20 W21, W22
J1
LLR-06
J12
KEY
STAR
14V
GND
W4
W8
W9
P4
J4101
GND
PWS
14V
ICL
PAT8
ICH
HV
STRT
KEY
TEMP
POWS
PAT
R4101 1k
R4102 100
C4101 0.0047
C4102 0.0047
C4103 0.0047
C4104 0.0047
C4105 0.0047
C4106 0.0047
C4107 0.0047
FOR
L3
REF
GND
T13V
R4001 4.7
R4007 4.7
C4005 0.1
C4003 0.1
C.P CP4002
C.P CP4001
IC3001 BU4094BCF
STR
D
CLK
OE
BST
MDA
MC
DRE
B0S
B1S
B2S
B3S
B4S
B5S
B6S
B7S
C3001 0.1
PROS
PRES
R3001 47k
R3002 47k
D3001 DAN202K
D3002 DAN202K
C3002 0.1
14V
IC3003 TD62783AF
VS
GND
PROF
PRON
C3006 470
IC3002 TD62783AF
IN1
IN2
IN3
IN4
IN5
IN6
IN7
IN8
O1
O2
O3
O4
O5
O6
O7
O8
R3003 47k
R3004 47k
R3005 47k
R3006 47k
R3007 47k
R3008 47k
R3009 47k
R3010 47k
B0
B1
B2
B3
B4
B5
B6
B7
D804 MA77
D811 MA77
D805 MA77
D812 MA77
D808 MA77
D815 MA77
D809 MA77
D816 MA77
L852 0.82µH
L853 1.2µH
C855 0.0012
C857 680p
L851 100µH
C853 68p
C856 0.0056
L855 1.5µH
L854 1.8µH
C851 0.1
R851 470
C852 470p
C854 270p
R852 1k
C858 0.1
L862 1.2µH
L863 1µH
C865 680p
C867 330p
L861 100µH
C863 56p
C866 0.0027
L865 1.2µH
L864 0.82µH
C861 0.1
R861 470
C862 330p
C864 330p
R862 1k
C868 0.1
L872 0.47µH
L873 0.56µH
C875 470p
C877 220p
L871 100µH
C873 56p
C876 0.0015
L875 0.82µH
L874 0.68µH
C871 0.0047
R871 470
C872 270p
C874 150p
R872 1k
C878 0.0047
L882 0.39µH
L883 0.39µH
C885 270p
C887 150p
L881 100µH
C883 33p
C886 0.0012
L885 0.56µH
L884 0.47µH
C881 0.0047
R881 470
C882 220p
C884 120p
R882 1k
C888 0.0047
L892 0.27µH
L893 0.27µH
C895 220p
C897 100p
L891 100µH
C899 33p
C893 39p
C896 820p
L895 0.39µH
L894 0.33µH
C891 0.0047
R891 470
C892 120p
C894 68p
R892 1k
C898 0.0047
IC3004 BU4094BCF
FST
MDA
MC
DRE
2S3K
2STH
2SQP
PRES
PROS
ATTS
IFS
C3003 0.1
C1707 0.1
R1729 10k
FOR
POCV
D1706 MA2S111
D1707 MA2S111
D1702 MA8043H
D1701 MA8043H
R1706 330
AMS
REF
ICH
ICL
Q1706 DTC114EE
BEPI
C2401 0.1
R2401 120k
C2406 0.0047
C2402 0.0047
TX
RX
C3004 0.1

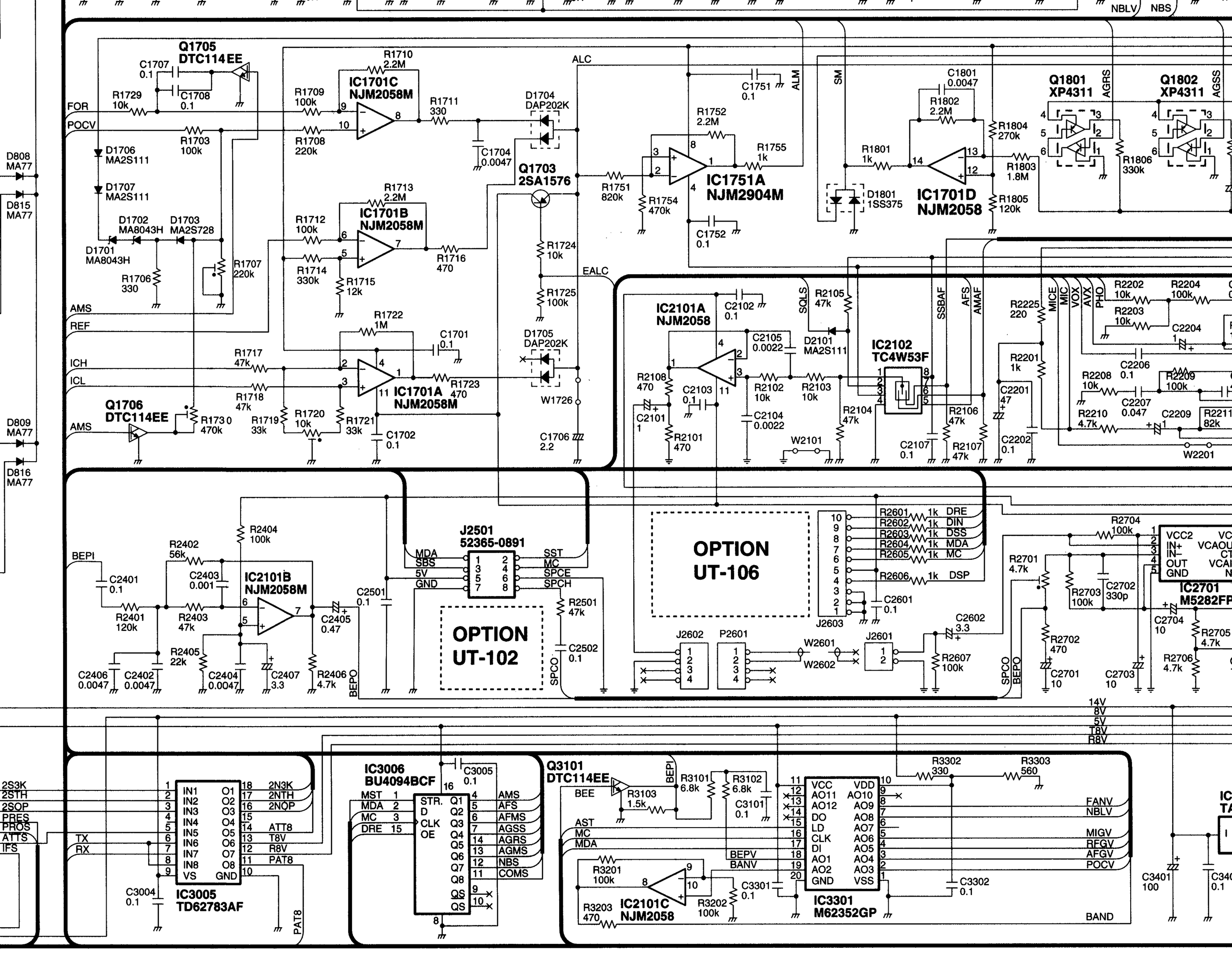
Q1705
DTC114EE
IC1701C
NJM2058M
IC1701B
NJM2058M
IC1701A
NJM2058M
Q1703
2SA1576
IC1751A
NJM2904M
IC1701D
NJM2058
Q1801
XP4311
Q1802
XP4311
IC2101A
NJM2058
IC2102
TC4W53F
Q1706
DTC114EE
IC2101B
NJM2058M
J2501
52365-0891
OPTION
UT-106
OPTION
UT-102
IC2701
M5282FP
IC3005
TD62783AF
IC3006
BU4094BCF
Q3101
DTC114EE
IC2101C
NJM2058
IC3301
M62352GP
FOR
POCV
AMS
REF
ICH
ICL
ALC
EALC
SM
ALM
SQLS
SSBAF
AFS
AMAF
MICE
MIC
VOX
AVX
PHO
AGRS
AGSS
NBLV
NBS
BEPI
SPCO
BEPO
DRE
DIN
DSS
MDA
MC
DSP
SST
SPCE
SPCH
MDA
SBS
5V
GND
14V
8V
5V
T8V
R8V
2S3K
2STH
2SOP
PRES
PROS
ATTS
IFS
TX
RX
2N3K
2NTH
2NQP
ATT8
T8V
R8V
PAT8
MST
MDA
MC
DRE
AMS
AFS
AFMS
AGSS
AGRS
AGMS
NBS
COMS
BEE
AST
MC
MDA
BEPV
BANV
FANV
NBLV
MIGV
RFGV
AFGV
POCV
BAND
D808
MA77
D815
MA77
D809
MA77
D816
MA77

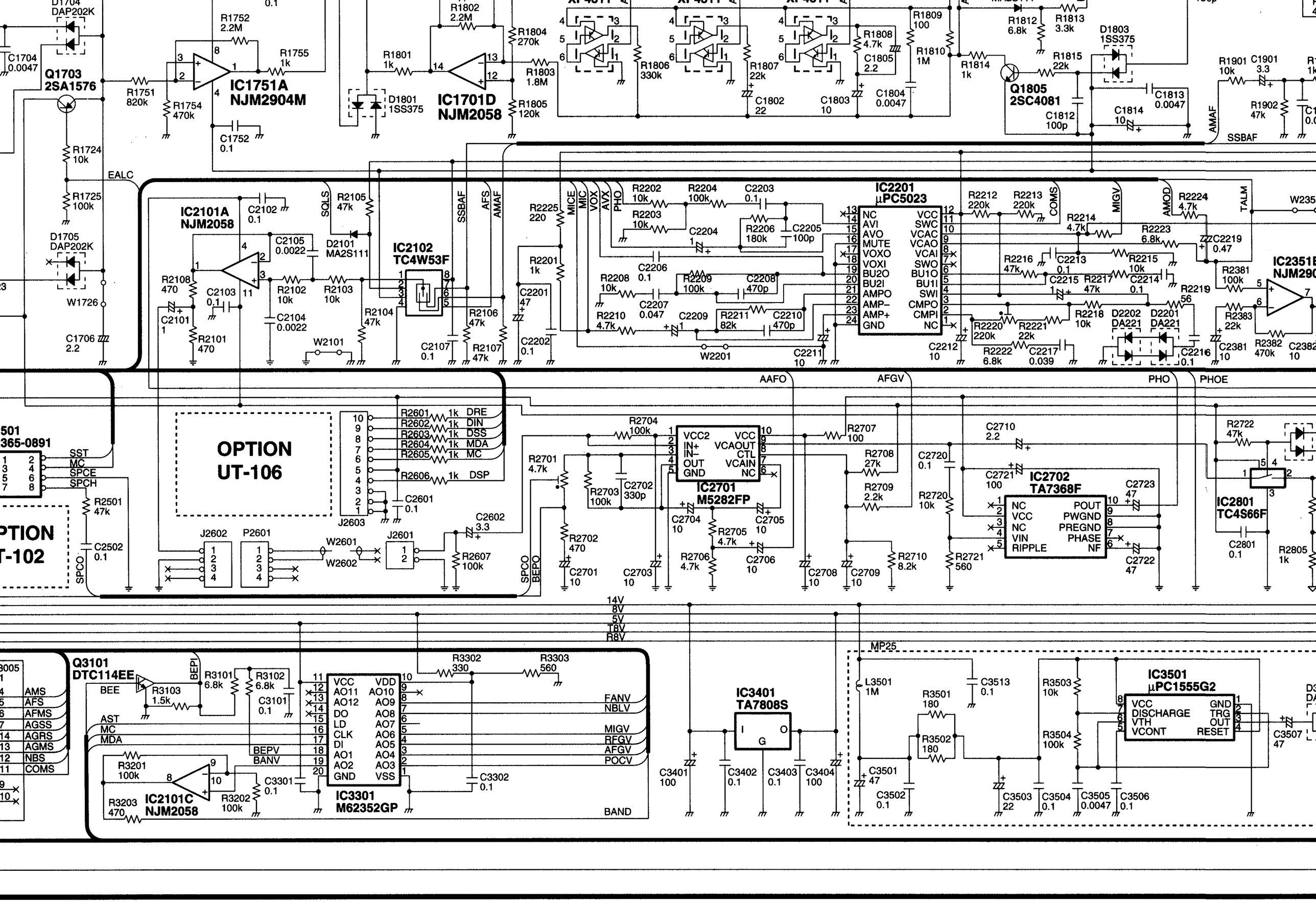
Q1703
2SA1576
IC1751A
NJM2904M
IC1701D
NJM2058
Q1805
2SC4081
IC2101A
NJM2058
IC2102
TC4W53F
IC2201
µPC5023
IC2351B
NJM2904
OPTION
UT-106
OPTION
UT-102
IC2701
M5282FP
IC2702
TA7368F
IC2801
TC4S66F
Q3101
DTC114EE
IC2101C
NJM2058
IC3301
M62352GP
IC3401
TA7808S
IC3501
µPC1555G2
14V
8V
5V
T8V
R8V
FANV
NBLV
MIGV
RFGV
AFGV
POCV
BAND
AAFO
AFGV
PHO
PHOE
SSBAF
AMAF
EALC
SPCO
BEPO
MP25

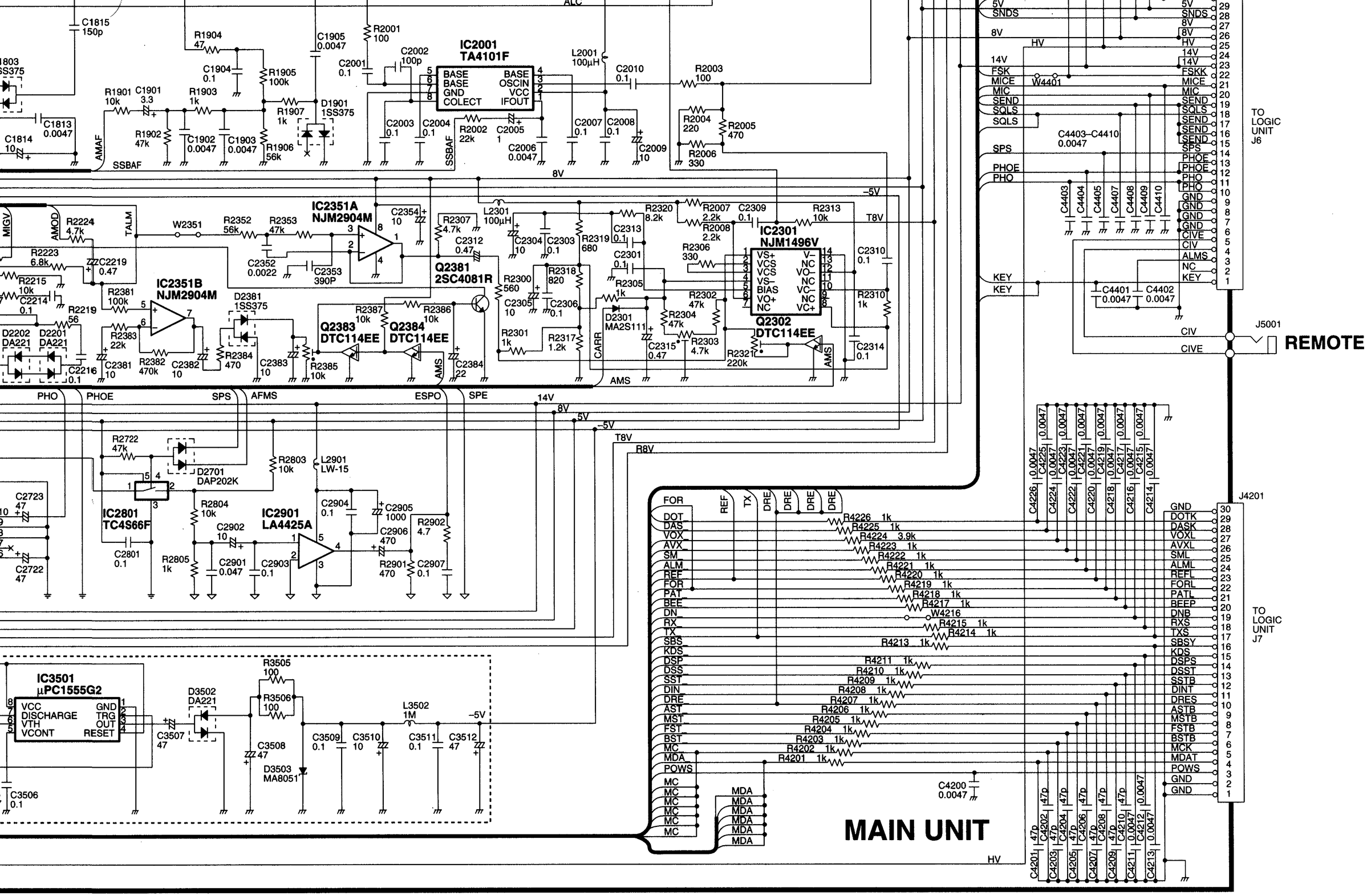

Downloaded by
Amateur Radio Directory
www.hamdirectory.info

To upgrade quality, some components may be subject to change without notice.

A-5649MH-3G
Printed in Japan
© 2000 Icom Inc.

Icom Inc